Engine Dimensions (mm) – GS150E

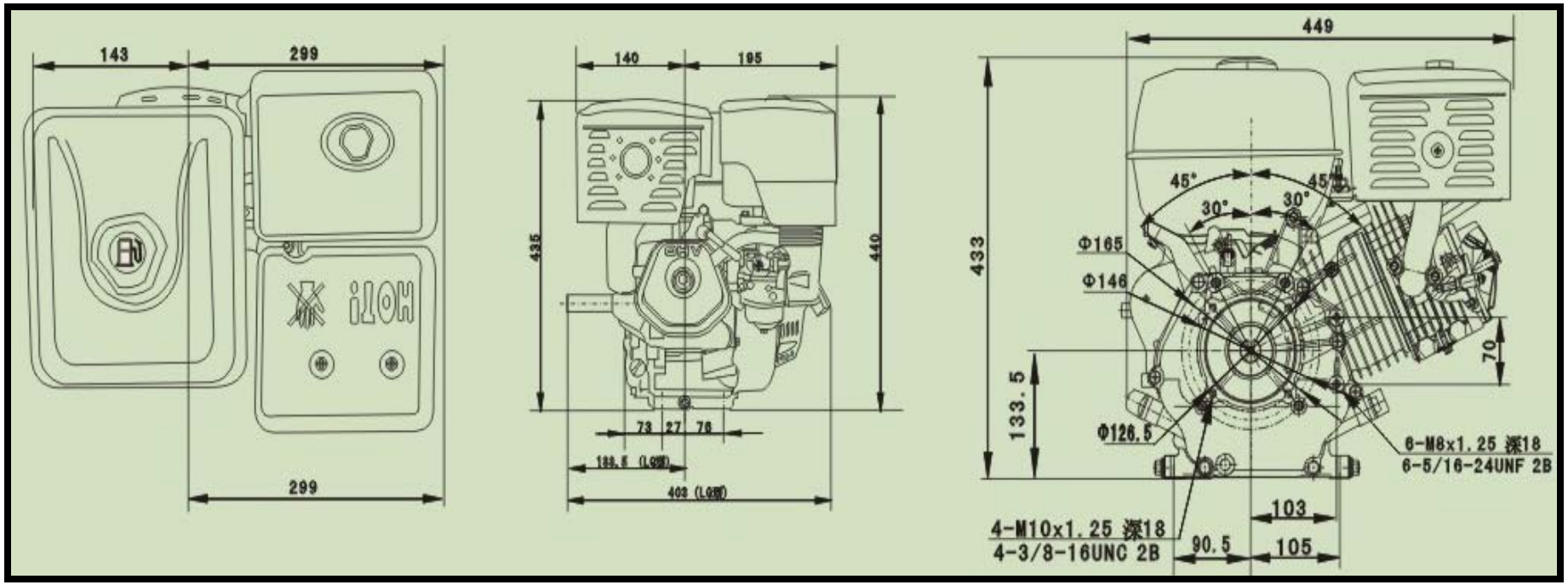

Not exactly as illustrated